Work Order ID 142345 *142345*

Monday, March 07, 2016 3:07:23 PM

Item ID: D119-646-314 **Accept** *N900040100* **Setup Start** *NS1*

Revision ID: **Stop** *NS2*

Item Name: Skidtube Protector, RH

Start Date: 3/18/2016 **Start Qty:** 1.00 *1* **Cust Item ID:**

Required Date: 3/24/2016 **Req'd Qty:** 1.00 *1* **Customer:**

Reference:

Run Start *NR1*

Approvals: **Process Plan:** [signature] **Date:** 16-3-8 **Tooling:** _____ **Date:** _____

QC: _____ **Date:** _____ **SPC (Y/N):** _____ **Date:** _____ **Stop** *NR2*

Sequence ID/ Work Center ID	Operation Description	Set Up/ Run Hours	Tool ID	Tool #	Plan Code	Accept Qty	Reject Qty	Reject Number	Insp. Stamp

Draw Nbr	Revision Nbr
DSI9734	A

MCJ 16-07-08

DAS 6 9-89

100 *100* DC Doc.Control -USB or Paperwork

Document Control 0.00

DOCUMENT CONTROL

Memo 0.00

Photocopy bluefile & type labels per PPP D119-646-313 CHG001

[redacted]

MAR 24 2016

110 *110* Packaging Packaging

Pick Kit 0.00

Memo 0.00

MAR 08 2016 DAS 6 9-89 DAS 26 9-89

120 *120* QC Quality Control

QC4- 100% Inspect kits for completeness 0.00

Memo 0.00

[redacted] 9-89

MAR 24 2016

DQA: _____ Date: _____

WORK ORDER NON-CONFORMANCE / UPDATE

DART AEROSPACE

QA Closed: Date:

Work Order update only ☐

Work Order: _____	DISPOSITION	AGAINST DEPARTMENT/PROCESS			
Part No. _____	Rework ☐	Skid-tube ☐	Cross tube ☐	Water Jet ☐	Engineering ☐
	Scrap ☐	Machining ☐	Small Fab ☐	Prod. Eng. Coor. ☐	Quality ☐
	Use-as-is ☐	Thermoforming ☐	Finishing ☐	Rec/Store/Packaging ☐	Other ☐
NCR No.	Suspected Unapproved ☐	Large Fab ☐	Composite ☐	Supplier ☐	☐

Date :	Step #:	QTY Effective :	MRB (QSI042) Approval

Description Work Order Deviation	Disposition	
		Completed By
		Lead hand / Supervisor Approval Verification
		QC / QA Coordinator Approval

Root Cause

Environment	☐	☐	No Re-verfication
Design	☐	☐	Operator
Doc/Data	☐	☐	Offset/Setup
Equip/Tooling	☐	☐	Supplier
Handling/Pre	☐	☐	Training
Material	☐	☐	Use for Testing
Internal Transport	☐	☐	Poor Information
Tribal Knowledge	☐	☐	Rushing
LOA	☐	☐	Product Improvement
Substation	☐	☐	Process Improvement
Past Expiry Date	☐	☐	Manufacturing Process
Misidentified	☐	☐	Past Due

FAULT CATEGORY

☐ Pressure/Forced	☐ Temperature/Cure	☐ Power Loss/Surge	☐ Positioned Wrong
☐ Bending	☐ Set-up	☐ Folio/Program	☐ Outside Dimensions
☐ Centre Not Concentric	☐ BOM/Route	☐ Grain	☐ Over/Under tolerance
☐ Cracks	☐ Broken/Damage/Defect	☐ Weld	☐ Part Incorrect
☐ Crimp/Kink/Ripple/Wave	☐ Inspection Incomplete/Unqualified	☐ Wrong Stock Pulled	☐ Part Lost/Missing
☐ Cuffs	☐ Contamination	☐ Out of Sequence	☐ Part Moved
☐ Crushing	☐ Countersink	☐ Off-set	☐ Drawing
☐ Heat Treat	☐ Cut Too Short	☐ Mislabeled	☐ Finish
☐ Wave/Twist in Tube	☐ Instructions Incomplete/Unclear	☐ Fit/Function	☐ Misread
☐ Marks/Chatter	☐ Drill Holes	☐ Misaligned/off center	☐ Turning Sequence

☐ OTHER :

Work Order ID 142345

Monday, March 07, 2016 3:07:23 PM

142345

Item ID: D119-646-314 **Accept** *N900040100* **Setup Start** *NS1*

Revision ID: **Stop** *NS2*

Item Name: Skidtube Protector, RH

Start Date: 3/18/2016 **Start Qty:** 1.00 *1* **Cust Item ID:**

Required Date: 3/24/2016 **Req'd Qty:** 1.00 *1* **Customer:**

Reference:

Run Start *NR1*

Stop *NR2*

Approvals: **Process Plan:** _____ **Date:** _____ **Tooling:** _____ **Date:** _____

QC: _____ **Date:** _____ **SPC (Y/N):** _____ **Date:** _____

Sequence ID/ Work Center ID	Operation Description	Set Up/ Run Hours	Tool ID	Tool #	Plan Code	Accept Qty	Reject Qty	Reject Number	Insp. Stamp
130		0.00							
130	Packaging								
Packaging	**Memo**	0.00							
Packaging	Identify and pack for shipping as per PPP D119-646-313 Location: sold		Shf MAR 2 4 2016						
140	QC21- Final Inspection - Work Order Release	0.00							
140						MCJ	MAR 2 4 2016		
QC	**Memo**	0.00							
Quality Control									

MCJ MAR 2 4 2016

DART AEROSPACE

DQA: _____ Date: _____

WORK ORDER NON-CONFORMANCE / UPDATE

QA Closed: Date:

Work Order update only ☐

Work Order: _____ Part No. _____ NCR No.	**DISPOSITION** Rework ☐ Scrap ☐ Use-as-is ☐ Suspected Unapproved ☐	**AGAINST DEPARTMENT/PROCESS** Skid-tube ☐ Cross tube ☐ Water Jet ☐ Engineering ☐ Machining ☐ Small Fab ☐ Prod. Eng. Coor. ☐ Quality ☐ Thermoforming ☐ Finishing ☐ Rec/Store/Packaging ☐ Other ☐ Large Fab ☐ Composite ☐ Supplier ☐

Date :	Step #:	QTY Effective :	MRB (QSI042) Approval

Description Work Order Deviation	Disposition	
		Completed By
		Lead hand / Supervisor Approval Verification
		QC / QA Coordinator Approval

Root Cause				FAULT CATEGORY			
Environment	☐	☐	No Re-verification	☐ Pressure/Forced	☐ Temperature/Cure	☐ Power Loss/Surge	☐ Positioned Wrong
Design	☐	☐	Operator	☐ Bending	☐ Set-up	☐ Folio/Program	☐ Outside Dimensions
Doc/Data	☐	☐	Offset/Setup	☐ Centre Not Concentric	☐ BOM/Route	☐ Grain	☐ Over/Under tolerance
Equip/Tooling	☐	☐	Supplier	☐ Cracks	☐ Broken/Damage/Defect	☐ Weld	☐ Part Incorrect
Handling/Pre	☐	☐	Training	☐ Crimp/Kink/Ripple/Wave	☐ Inspection Incomplete/Unqualified	☐ Wrong Stock Pulled	☐ Part Lost/Missing
Material	☐	☐	Use for Testing	☐ Cuffs	☐ Contamination	☐ Out of Sequence	☐ Part Moved
Internal Transport	☐	☐	Poor Information	☐ Crushing	☐ Countersink	☐ Off-set	☐ Drawing
Tribal Knowledge	☐	☐	Rushing	☐ Heat Treat	☐ Cut Too Short	☐ Mislabeled	☐ Finish
LOA	☐	☐	Product Improvement	☐ Wave/Twist in Tube	☐ Instructions Incomplete/Unclear	☐ Fit/Function	☐ Misread
Substation	☐	☐	Process Improvement	☐ Marks/Chatter	☐ Drill Holes	☐ Misaligned/off center	☐ Turning Sequence
Past Expiry Date	☐	☐	Manufacturing Process				
Misidentified	☐	☐	Past Due	☐ OTHER :			

Picklist Print

Monday, March 07, 2016 3:07:32 PM

Work Order ID: 142345 *142345*

Parent Item: D119-646-314 *D119-646-314*

Parent Item Name: Skidtube Protector, RH

Start Date: 3/18/2016 **Required Date:** 3/24/2016

Start Qty: 1.00 **Required Qty:** 1.00

Comments: IPP REV:A 15.12.10 NEW ISSUE DD VERF:JLM

Component Item ID/ Item Name	Replacement Item ID	Mfg/ Purch	Bin Item	Primary Location	Last Location	Route Seq ID	Unit of Measure	Qty on Hand	Qty per Kit	Total Qty	Qty Issued	Date Issued	Status
D3904-1 *D3904-1* Washer		Manufactured	No				Each	188.0000	**	6		DAS 6 9-89	
DAS 27 9-89				**Location**		**Loc Qty**		**Loc Code**					
				FP001		188							
					133289	88				6		MAR 08 2016	
					~~141452~~	100							
D4506-3 *D4506-3* Washer		Manufactured	No				Each	0.0000	**	6 142350		DAS 6 9-89	
D5369-2 *D5369-2* Cable Guard		Manufactured	No				Each	0.0000	**	1 142043		DAS 6 9-89 MAR 21 2016	
D5371-2 *D5371-2* Hook		Manufactured	No				Each	1.0000	**	1 142356		DAS 6 9-89 MAR 21 2016	
DAS 27 9-89				**Location**		**Loc Qty**		**Loc Code**					
				prelim		1							
					139942	1							
D5372-1 *D5372-1* Plug		Manufactured	No				Each	0.0000	**	1 142357	Sd		
DAS 27 9-89													

DART AEROSPACE

DQA: _____ Date: _____

WORK ORDER NON-CONFORMANCE / UPDATE

QA Closed: Date:

Work Order update only ☐

Work Order: _____ Part No. _____ NCR No.	**DISPOSITION** Rework ☐ Scrap ☐ Use-as-is ☐ Suspected Unapproved ☐	**AGAINST DEPARTMENT/PROCESS** Skid-tube ☐ Cross tube ☐ Water Jet ☐ Engineering ☐ Machining ☐ Small Fab ☐ Prod. Eng. Coor. ☐ Quality ☐ Thermoforming ☐ Finishing ☐ Rec/Store/Packaging ☐ Other ☐ Large Fab ☐ Composite ☐ Supplier ☐

Date :	Step #:	QTY Effective :	MRB (QSI042) Approval

Description Work Order Deviation	Disposition	
		Completed By
		Lead hand / Supervisor Approval Verification
		QC / QA Coordinator Approval

Root Cause				FAULT CATEGORY			
Environment	☐	☐	No Re-verfication	☐ Pressure/Forced	☐ Temperature/Cure	☐ Power Loss/Surge	☐ Positioned Wrong
Design	☐	☐	Operator	☐ Bending	☐ Set-up	☐ Folio/Program	☐ Outside Dimensions
Doc/Data	☐	☐	Offset/Setup	☐ Centre Not Concentric	☐ BOM/Route	☐ Grain	☐ Over/Under tolerance
Equip/Tooling	☐	☐	Supplier	☐ Cracks	☐ Broken/Damage/Defect	☐ Weld	☐ Part Incorrect
Handling/Pre	☐	☐	Training	☐ Crimp/Kink/Ripple/Wave	☐ Inspection Incomplete/Unqualified	☐ Wrong Stock Pulled	☐ Part Lost/Missing
Material	☐	☐	Use for Testing	☐ Cuffs	☐ Contamination	☐ Out of Sequence	☐ Part Moved
Internal Transport	☐	☐	Poor Information	☐ Crushing	☐ Countersink	☐ Off-set	☐ Drawing
Tribal Knowledge	☐	☐	Rushing	☐ Heat Treat	☐ Cut Too Short	☐ Mislabeled	☐ Finish
LOA	☐	☐	Product Improvement	☐ Wave/Twist in Tube	☐ Instructions Incomplete/Unclear	☐ Fit/Function	☐ Misread
Substation	☐	☐	Process Improvement	☐ Marks/Chatter	☐ Drill Holes	☐ Misaligned/off center	☐ Turning Sequence
Past Expiry Date	☐	☐	Manufacturing Process				
Misidentified	☐	☐	Past Due	☐ OTHER :			

Picklist Print

Monday, March 07, 2016 3:07:33 PM

Work Order ID: 142345 *142345*

Parent Item: D119-646-314 *D119-646-314*

Parent Item Name: Skidtube Protector, RH

Start Date: 3/18/2016 **Required Date:** 3/24/2016

Start Qty: 1.00 **Required Qty:** 1.00

D5374-1 Manufactured No Each 20.0000 **

D5374-1

Bushing

DAS 27 9-89

Location	Loc Qty	Loc Code
prelim	20	
139856	8	
139980	12	

6

DAS 26 9-89

D5374-3 Manufactured No Each 26.0000 **

D5374-3

Bushing

DAS 27 9-89

Location	Loc Qty	Loc Code
prelim	6	
139857	6	
ST163	20	
139981	20	

6x

8

DAS 6 9-89

DAS 26 9-89

D5376-1 Manufactured No Each 1.0000 **

D5376-1

Drilling Tool

DAS 27 9-89

Location	Loc Qty	Loc Code
ST365	1	
141661	1	

1

142346

DAS 6 9-89

AN3-45A Purchased No Each 8.0000 **

AN3-45A

Bolt

DAS 27 9-89

Location	Loc Qty	Loc Code
ST346	8	
m133812	8	

4

134544

DAS 6 9-89

MAR 23 2016

DAS 26 9-89

DART AEROSPACE

DQA: _____ Date: _____

WORK ORDER NON-CONFORMANCE / UPDATE

QA Closed: Date:

Work Order update only ☐

Work Order: _____ Part No. _____ NCR No.	**DISPOSITION** Rework ☐ Scrap ☐ Use-as-is ☐ Suspected Unapproved ☐	**AGAINST DEPARTMENT/PROCESS** Skid-tube ☐ Cross tube ☐ Water Jet ☐ Engineering ☐ Machining ☐ Small Fab ☐ Prod. Eng. Coor. ☐ Quality ☐ Thermoforming ☐ Finishing ☐ Rec/Store/Packaging ☐ Other ☐ Large Fab ☐ Composite ☐ Supplier ☐

Date :	Step #:	QTY Effective :	MRB (QSI042) Approval

Description Work Order Deviation	Disposition	
		Completed By
		Lead hand / Supervisor Approval Verification
		QC / QA Coordinator Approval

Root Cause				FAULT CATEGORY			
Environment	☐	☐	No Re-verification	☐ Pressure/Forced	☐ Temperature/Cure	☐ Power Loss/Surge	☐ Positioned Wrong
Design	☐	☐	Operator	☐ Bending	☐ Set-up	☐ Folio/Program	☐ Outside Dimensions
Doc/Data	☐	☐	Offset/Setup	☐ Centre Not Concentric	☐ BOM/Route	☐ Grain	☐ Over/Under tolerance
Equip/Tooling	☐	☐	Supplier	☐ Cracks	☐ Broken/Damage/Defect	☐ Weld	☐ Part Incorrect
Handling/Pre	☐	☐	Training	☐ Crimp/Kink/Ripple/Wave	☐ Inspection Incomplete/Unqualified	☐ Wrong Stock Pulled	☐ Part Lost/Missing
Material	☐	☐	Use for Testing	☐ Cuffs	☐ Contamination	☐ Out of Sequence	☐ Part Moved
Internal Transport	☐	☐	Poor Information	☐ Crushing	☐ Countersink	☐ Off-set	☐ Drawing
Tribal Knowledge	☐	☐	Rushing	☐ Heat Treat	☐ Cut Too Short	☐ Mislabeled	☐ Finish
LOA	☐	☐	Product Improvement	☐ Wave/Twist in Tube	☐ Instructions Incomplete/Unclear	☐ Fit/Function	☐ Misread
Substation	☐	☐	Process Improvement	☐ Marks/Chatter	☐ Drill Holes	☐ Misaligned/off center	☐ Turning Sequence
Past Expiry Date	☐	☐	Manufacturing Process				
Misidentified	☐	☐	Past Due	☐ OTHER :			

Picklist Print

Monday, March 07, 2016 3:07:33 PM

Work Order ID: 142345

142345

Parent Item: D119-646-314

D119-646-314

Parent Item Name: Skidtube Protector, RH

Start Date: 3/18/2016 **Required Date:** 3/24/2016

Start Qty: 1.00 **Required Qty:** 1.00

AN3-47A Purchased No Each 12.0000 **

AN3-47A

Bolt

DAS 27 9-89

Location	Loc Qty	Loc Code
ST346	12	
m134257	12	

6

DAS 6 9-89

AN3-50A Purchased No Each 19.0000 **

AN3-50A

Bolt

DAS 27 9-89

Location	Loc Qty	Loc Code
ST346	19	
m133855	19	

6

DAS 6 9-89

NAS1149D0332J Purchased No Each 1,184.000 **

NAS1149D0332J

Washer

DAS 27 9-89

Location	Loc Qty	Loc Code
CA	14	
m129682	14	
FP001	24	
m129682	24	
GA	119	
m132677	119	
ST260a	600	
m133988	600	
ST264	427	
m133498	427	

14

DAS 6 9-89

MAR 08 2016

DART AEROSPACE

DQA: _____ Date: _____

WORK ORDER NON-CONFORMANCE / UPDATE

QA Closed: Date:

Work Order update only ☐

Work Order: _____ Part No. _____ NCR No.	**DISPOSITION** Rework ☐ Scrap ☐ Use-as-is ☐ Suspected Unapproved ☐	**AGAINST DEPARTMENT/PROCESS** Skid-tube ☐ Cross tube ☐ Water Jet ☐ Engineering ☐ Machining ☐ Small Fab ☐ Prod. Eng. Coor. ☐ Quality ☐ Thermoforming ☐ Finishing ☐ Rec/Store/Packaging ☐ Other ☐ Large Fab ☐ Composite ☐ Supplier ☐

Date :	Step #:	QTY Effective :	MRB (QSI042) Approval

Description Work Order Deviation	Disposition	
		Completed By
		Lead hand / Supervisor Approval Verification
		QC / QA Coordinator Approval

Root Cause				FAULT CATEGORY			
Environment	☐	☐	No Re-verification	☐ Pressure/Forced	☐ Temperature/Cure	☐ Power Loss/Surge	☐ Positioned Wrong
Design	☐	☐	Operator	☐ Bending	☐ Set-up	☐ Folio/Program	☐ Outside Dimensions
Doc/Data	☐	☐	Offset/Setup	☐ Centre Not Concentric	☐ BOM/Route	☐ Grain	☐ Over/Under tolerance
Equip/Tooling	☐	☐	Supplier	☐ Cracks	☐ Broken/Damage/Defect	☐ Weld	☐ Part Incorrect
Handling/Pre	☐	☐	Training	☐ Crimp/Kink/Ripple/Wave	☐ Inspection Incomplete/Unqualified	☐ Wrong Stock Pulled	☐ Part Lost/Missing
Material	☐	☐	Use for Testing	☐ Cuffs	☐ Contamination	☐ Out of Sequence	☐ Part Moved
Internal Transport	☐	☐	Poor Information	☐ Crushing	☐ Countersink	☐ Off-set	☐ Drawing
Tribal Knowledge	☐	☐	Rushing	☐ Heat Treat	☐ Cut Too Short	☐ Mislabeled	☐ Finish
LOA	☐	☐	Product Improvement	☐ Wave/Twist in Tube	☐ Instructions Incomplete/Unclear	☐ Fit/Function	☐ Misread
Substation	☐	☐	Process Improvement	☐ Marks/Chatter	☐ Drill Holes	☐ Misaligned/off center	☐ Turning Sequence
Past Expiry Date	☐	☐	Manufacturing Process				
Misidentified	☐	☐	Past Due	☐ OTHER :			

Picklist Print

Monday, March 07, 2016 3:07:33 PM

Work Order ID: 142345

142345

Parent Item: D119-646-314

D119-646-314

Parent Item Name: Skidtube Protector, RH

Start Date: 3/18/2016 **Required Date:** 3/24/2016

Start Qty: 1.00 **Required Qty:** 1.00

MS21042L3 Purchased No Each 2,970.000 10

MS21042L3

Nut

**

DAS 26 9-89

DAS 6 9-89

DAS 27 9-89

Location		Loc Qty	Loc Code	
FP001		163		
	m133790	163		
GA		68		
	m133790	68		
OVER007		2000		
	m134360	2000		
ST304		739		10
	m134039	739		

MAR 0 8 2016

DART AEROSPACE

DQA: _____ Date: _____

WORK ORDER NON-CONFORMANCE / UPDATE

QA Closed: Date:

Work Order update only ☐

Work Order: _____ Part No. _____ NCR No.	**DISPOSITION** Rework ☐ Scrap ☐ Use-as-is ☐ Suspected Unapproved ☐	**AGAINST DEPARTMENT/PROCESS** Skid-tube ☐ Cross tube ☐ Water Jet ☐ Engineering ☐ Machining ☐ Small Fab ☐ Prod. Eng. Coor. ☐ Quality ☐ Thermoforming ☐ Finishing ☐ Rec/Store/Packaging ☐ Other ☐ Large Fab ☐ Composite ☐ Supplier ☐

Date :	Step #:	QTY Effective :	MRB (QSI042) Approval

Description Work Order Deviation	Disposition	
		Completed By
		Lead hand / Supervisor Approval Verification
		QC / QA Coordinator Approval

Root Cause				FAULT CATEGORY			
Environment	☐	☐	No Re-verification	☐ Pressure/Forced	☐ Temperature/Cure	☐ Power Loss/Surge	☐ Positioned Wrong
Design	☐	☐	Operator	☐ Bending	☐ Set-up	☐ Folio/Program	☐ Outside Dimensions
Doc/Data	☐	☐	Offset/Setup	☐ Centre Not Concentric	☐ BOM/Route	☐ Grain	☐ Over/Under tolerance
Equip/Tooling	☐	☐	Supplier	☐ Cracks	☐ Broken/Damage/Defect	☐ Weld	☐ Part Incorrect
Handling/Pre	☐	☐	Training	☐ Crimp/Kink/Ripple/Wave	☐ Inspection Incomplete/Unqualified	☐ Wrong Stock Pulled	☐ Part Lost/Missing
Material	☐	☐	Use for Testing	☐ Cuffs	☐ Contamination	☐ Out of Sequence	☐ Part Moved
Internal Transport	☐	☐	Poor Information	☐ Crushing	☐ Countersink	☐ Off-set	☐ Drawing
Tribal Knowledge	☐	☐	Rushing	☐ Heat Treat	☐ Cut Too Short	☐ Mislabeled	☐ Finish
LOA	☐	☐	Product Improvement	☐ Wave/Twist in Tube	☐ Instructions Incomplete/Unclear	☐ Fit/Function	☐ Misread
Substation	☐	☐	Process Improvement	☐ Marks/Chatter	☐ Drill Holes	☐ Misaligned/off center	☐ Turning Sequence
Past Expiry Date	☐	☐	Manufacturing Process				
Misidentified	☐	☐	Past Due	☐ OTHER :			

DART SERVICE INSTRUCTION

TO AMEND INSTALLATION INSTRUCTIONS IIN-D119-646 REV. C
AND INSTRUCTIONS FOR CONTINUED AIRWORTHINESS ICA-D119-646 REV. 2
REF FAA STC: SR02024SE
REF EASA STC: 10040294

1.0 PURPOSE:

The purpose of this Dart Service Instructions is to add D119-646-313/-314 Skidtube Protector Kit to make the D119-646-011/-012/-111/-112/-211/-212 Skidtube Kits compatible with the 109-0812-68-105 Hoist Structural Provision Kit and the 109-0816-18-301 Rappelling Kit. The D119-646-313 Skidtube Protector, LH replaces the 109-B710-05-201 kit and the D119-646-314 Skidtube Protector, RH replaces the 109-B710-05-202 kit.

2.0 D119-646-313/-314 INSTALLATION:

These instructions are for modifying the D119-646-011/-012/-111/-112 Skidtube Installations.

2.1 Remove D3492-045 Plug Assemblies from two locations on each side of the skidtube as shown in Figure 3.
2.2 Position D5376-1 drilling jig tool with the arrow pointing fwd as shown in Figure 3. Use 2x AN3-45A bolts to hold the jig in place. Transfer drill 4x ∅0.129" (#30 drill) holes from D5376-1 drilling jig to skidtube ridge as shown in Figure 3. **Caution:** Drill perpendicular to the skidtube ridge.
2.3 Remove drilling jig. Using a 5/16" drill, open up the pilot holes and drill through the skidtube ridge and center web inside of the skidtube. **Caution:** Drill perpendicular to the skidtube ridge.
2.4 Countersunk 4x 5/16" holes to ∅0.348" (8.84mm) x 100° as shown in Figure 3 and deburr.
2.5 Repeat steps 2.2 to 2.4 for the opposite side of the skidtube.
2.6 Vacuum the debris from inside of the skidtube. Touch up affected area using (Alodine 1200 or 1201) per MIL-DTL-5541.
2.7 Install 8x D5374-3 Bushings in the new holes. Seal bushings with Sikaflex-241/-291 or Proseal 890 or MIL-S-8802 Class 'B2' sealant as shown in Section C-C.
2.8 Remove all D3492-045 Plug Assemblies from skidtube fwd of the ground handling wheel lugs.
2.9 If the D119-646-314 Skidtube Protector Kit is required for hoisting operations on the RH side of the aircraft install D5372-1 Plug using 4x AN3-45A bolts, 8x NAS11490D332J washer and 4x MS21042L3 nuts as shown in Section C-C and Figure 4 Detail E. Torque bolts to 15-25 in-lbs (1.7-2.8 N-m).
2.10 If the D119-646-313 Skidtube Protector Kit is required for hoisting operations on the LH side of the aircraft install D5372-1 Plug using 4x AN3-45A bolts, 8x NAS11490D332J washer and 4x MS21042L3 nuts as shown in Section C-C and Figure 4 Detail E. Torque bolts to 15-25 in-lbs (1.7-2.8 N-m).
2.11 If the D119-646-314 Skidtube Protector Kit is required for rappelling operations on the RH side of the aircraft install D5371-2 Hook using 4x AN3-45A bolts, 8x NAS11490D332J washer and 4x MS21042L3 nuts as shown in Section C-C and Figure 5 Detail F. Torque bolts to 15-25 in-lbs (1.7-2.8 N-m).
2.12 If the D119-646-313 Skidtube Protector Kit is required for rappelling operations on the LH side of the aircraft install D5371-1 Hook using 4x AN3-45A bolts, 8x NAS11490D332J washer and 4x MS21042L3 nuts as shown in Section C-C and Figure 5 Detail F. Torque bolts to 15-25 in-lbs (1.7-2.8 N-m).
2.13 Install D5369-2 Cable Guard on the RH side of the aircraft using 6x AN3-47A bolts, 6x D5374-1 Bushings, 6x D4506-3 Washers, 12x NAS11490D332J washers, 6x MS21042L3 nuts as shown in Figure 1 Section A-A. Torque bolts to 15-25 in-lbs (1.7-2.8 N-m).
2.14 Install D5369-1 Cable Guard on the LH side of the aircraft using 6x AN3-47A bolts, 6x D5374-1 Bushings, 6x D4506-3 Washers, 12x NAS11490D332J washers, 6x MS21042L3 nuts as shown in Figure 1 Section A-A. Torque bolts to 15-25 in-lbs (1.7-2.8 N-m).
2.15 Update aircraft log book to indicate installation of the D119-646-313/-314 kit and adjust weight and balance record for the aircraft with weight and balance data provided in Section 5.0 of this document.

NOTE: Additional NAS1149D0332J washers may be installed under the nuts to ensure 1.5-4 threads in safety on the bolts. Although not generally necessary, it is also acceptable to replace the AN3 bolts provided with longer or shorter AN3 bolts, if required.

A	NEW ISSUE	RF	15.12.10
REV.	DESCRIPTION	BY	DATE

DESIGN	RF	**DART AEROSPACE USA, INC.** EUGENE, OR	
DRAWN	RF		
CHECKED	HS	DRAWING NO. DSI 9734	REV. A
MFG. APPR.	N/A		SHEET 1 OF 8
APPROVED	HS	TITLE SKIDTUBE PROTECTOR KIT	SCALE NTS
DE APPR.			
DATE	15.12.10		

COPYRIGHT © 2014 BY DART AEROSPACE USA, INC.
THIS DOCUMENT IS PRIVATE AND CONFIDENTIAL AND IS SUPPLIED ON THE EXPRESS CONDITION THAT IT IS NOT TO BE USED FOR ANY PURPOSE OR COPIED OR COMMUNICATED TO ANY OTHER PERSON WITHOUT WRITTEN PERMISSION FROM DART AEROSPACE USA, INC.

3.0 D119-646-313/-314 INSTALLATION:

These instructions are for modifying the D119-646-211/-212 Skidtube Installations.

3.1 Temporarily remove D3849-043 Training Wearplate from aft end of the skidtube per ICA-D119-646 Section 32.

3.2 Position D5376-1 drilling jig tool with the arrow pointing fwd as shown in Figure 3. Use 2x AN3-45A bolts to hold the jig in place. Transfer drill 4x ∅0.129" (#30 drill) holes from D5376-1 drilling jig to skidtube ridge as shown in Figure 3. **Caution:** Drill perpendicular to the skidtube ridge.

3.3 Remove drilling jig. Using a 5/16" drill, open up the pilot holes and drill through the skidtube ridge and center web inside of the skidtube. **Caution:** Drill perpendicular to the skidtube ridge.

3.4 Countersunk 4x 5/16" holes to ∅0.348" (8.84mm) x 100° as shown in Figure 3 and deburr.

3.5 Repeat steps 3.2 to 3.4 for the opposite side of the skidtube.

3.6 Vacuum the debris from inside of the skidtube. Touch up affected area using (Alodine 1200 or 1201) per MIL-DTL-5541.

3.7 Install 8x D5374-3 Bushings in the new holes. Seal bushings with Sikaflex-241/-291 or Proseal 890 or MIL-S-8802 Class 'B2' sealant as shown in Section C-C.

3.8 Remove and discard all hardware attaching the training wearplates in front of the skidtube ground handling lugs.

3.9 If the D119-646-314 Skidtube Protector Kit is required for hoisting operations on the RH side of the aircraft install D5372-1 Plug using 4x AN3-45A bolts, 8x NAS11490D332J washer and 4x MS21042L3 nuts as shown in Section C-C and Figure 4 Detail E. Torque bolts to 15-25 in-lbs (1.7-2.8 N-m).

3.10 If the D119-646-313 Skidtube Protector Kit is required for hoisting operations on the LH side of the aircraft install D5372-1 Plug using 4x AN3-45A bolts, 8x NAS11490D332J washer and 4x MS21042L3 nuts as shown in Section C-C and Figure 4 Detail E. Torque bolts to 15-25 in-lbs (1.7-2.8 N-m).

3.11 If the D119-646-314 Skidtube Protector Kit is required for rappelling operations on the RH side of the aircraft install D5371-2 Hook using 4x AN3-45A bolts, 8x NAS11490D332J washer and 4x MS21042L3 nuts as shown in Section C-C and Figure 5 Detail F. Torque bolts to 15-25 in-lbs (1.7-2.8 N-m).

3.12 If the D119-646-313 Skidtube Protector Kit is required for rappelling operation on the LH side of the aircraft install D5371-1 Hook using 4x AN3-45A bolts, 8x NAS11490D332J washer and 4x MS21042L3 nuts as shown in Section C-C and Figure 5 Detail F. Torque bolts to 15-25 in-lbs (1.7-2.8 N-m).

3.13 Reinstall the D3849-043 Training Wearplate on the aft end of the skidtube per ICA-D119-646 Section 32, except for hardware under D5369-1/-2 Cable Guard.

3.14 Install D5369-2 Cable Guard on the RH side of the aircraft using 6x AN3-50A bolts, 6x D5374-1 Bushings, 6x D3904-1 Washers, 6x MS21042L3 nuts as shown in Figure 2 Section B-B. Torque bolts to 15-25 in-lbs (1.7-2.8 N-m).

3.15 Install D5369-1 Cable Guard on the LH side of the aircraft using 6x AN3-50A bolts, 6x D5374-1 Bushings, 6x D3904-1 Washers, 6x MS21042L3 nuts as shown in Figure 2 Section B-B. Torque bolts to 15-25 in-lbs (1.7-2.8 N-m).

3.16 Update aircraft log book to indicate installation of the D119-646-313/-314 kit and adjust weight and balance record for the aircraft with weight and balance data provided in Section 5.0 of this document.

NOTE: Additional NAS1149D0332J washers may be installed under the nuts to ensure 1.5-4 threads in safety on the bolts. Although not generally necessary, it is also acceptable to replace the AN3 bolts provided with longer or shorter AN3 bolts, if required.

DESIGN	RF	**DART AEROSPACE USA, INC.** EUGENE, OR
DRAWN	RF	
CHECKED	HS	DRAWING NO. DSI 9734 — REV. A
MFG. APPR.	N/A	SHEET 2 OF 8
APPROVED	HS	TITLE: SKIDTUBE PROTECTOR KIT — SCALE: NTS
DE APPR.		
DATE	15.12.10	

COPYRIGHT © 2014 BY DART AEROSPACE USA, INC.
THIS DOCUMENT IS PRIVATE AND CONFIDENTIAL AND IS SUPPLIED ON THE EXPRESS CONDITION THAT IT IS NOT TO BE USED FOR ANY PURPOSE OR COPIED OR COMMUNICATED TO ANY OTHER PERSON WITHOUT WRITTEN PERMISSION FROM DART AEROSPACE USA, INC.

4.0 PARTS LIST:

Qty. -313	Qty. -314	PART NUMBER	DESCRIPTION
X		**D119-646-313**	**SKIDTUBE PROTECTOR, LH**
	X	**D119-646-314**	**SKIDTUBE PROTECTOR, RH**
6	6	D3904-1	WASHER
6	6	D4506-3	WASHER
1		D5369-1	CABLE GUARD, LH
	1	D5369-2	CABLE GUARD, RH
1		D5371-1	HOOK, LH
	1	D5371-2	HOOK, RH
1	1	D5372-1	PLUG
6	6	D5374-1	BUSHING
8	8	D5374-3	BUSHING
1	1	D5376-1	DRILLING JIG
4	4	AN3-45A	BOLT
6	6	AN3-47A	BOLT
6	6	AN3-50A	BOLT
14	14	NAS1149D0332J	WASHER
10	10	MS21042L3	NUT

5.0 WEIGHT AND BALANCE

The following weight and balance changes are applicable:

Installation	Weight	LONGITUDINAL		LATERAL	
		Arm	Moment	Arm	Moment
D119-646-313 SKIDTUBE PROTECTOR, LH	4.3 lb 1.95 kg	108.1 in 4.3 m	465 in-lb 8.4 kg-m	-43.4 in 1.7 m	-187 in-lb -3.3 kg-m
D119-646-314 SKIDTUBE PROTECTOR, RH	4.3 lb 1.95 kg	108.1 in 4.30 m	465 in-lb 8.4 kg-m	43.4 in 1.7 m	187 in-lb 3.3 kg-m

DESIGN	RF	**DART AEROSPACE USA, INC.** EUGENE, OR
DRAWN	RF	
CHECKED	HS	DRAWING NO. DSI 9734 — REV. A
MFG. APPR.	N/A	SHEET 3 OF 8
APPROVED	HS	TITLE SKIDTUBE PROTECTOR KIT — SCALE NTS
DE APPR.		
DATE	15.12.10	

COPYRIGHT © 2014 BY DART AEROSPACE USA, INC.
THIS DOCUMENT IS PRIVATE AND CONFIDENTIAL AND IS SUPPLIED ON THE EXPRESS CONDITION THAT IT IS NOT TO BE USED FOR ANY PURPOSE OR COPIED OR COMMUNICATED TO ANY OTHER PERSON WITHOUT WRITTEN PERMISSION FROM DART AEROSPACE USA, INC.

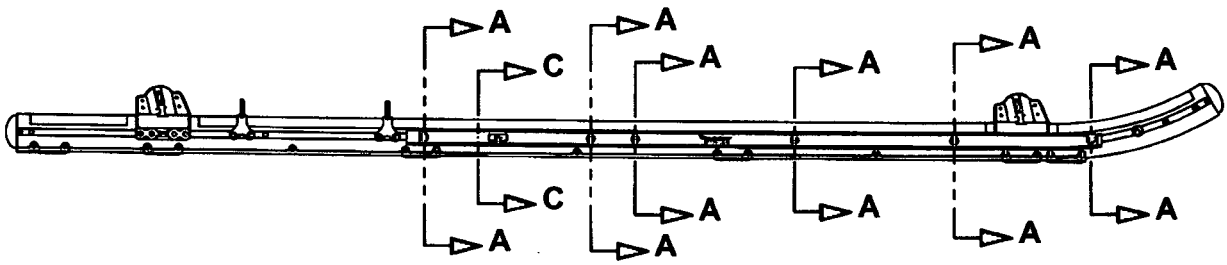

FIGURE 1: D119-646-314 SKIDTUBE PROTECTOR KIT, RH (SHOWN)
(D119-646-313 SKIDTUBE PROTECTOR, LH (OPPOSITE))
(SHOWN INSTALLED ON D119-646-011/-012/-111/-112 SKIDTUBES)

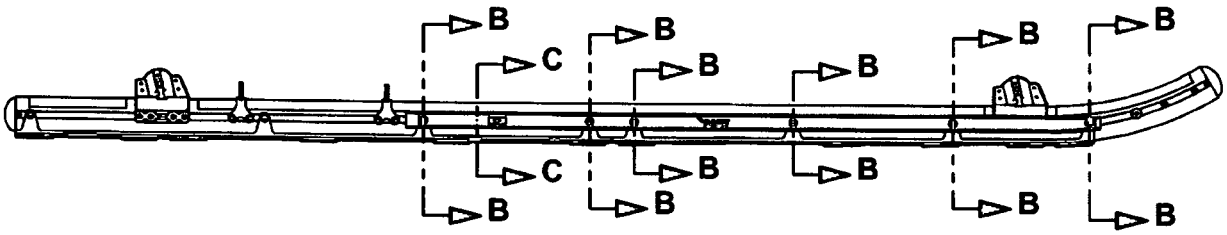

FIGURE 2: D119-646-314 SKIDTUBE PROTECTOR KIT, RH (SHOWN)
(D119-646-313 SKIDTUBE PROTECTOR, LH (OPPOSITE))
(SHOWN INSTALLED ON D119-646-211/-212 SKIDTUBES)

DESIGN	RF	**DART AEROSPACE USA, INC.** EUGENE, OR
DRAWN	RF	
CHECKED	HS	DRAWING NO. DSI 9734 — REV. A
MFG. APPR.	N/A	SHEET 4 OF 8
APPROVED	HS	TITLE SKIDTUBE PROTECTOR KIT — SCALE NTS
DE APPR.		
DATE	15.12.10	

COPYRIGHT © 2014 BY DART AEROSPACE USA, INC.
THIS DOCUMENT IS PRIVATE AND CONFIDENTIAL AND IS SUPPLIED ON THE EXPRESS CONDITION THAT IT IS NOT TO BE USED FOR ANY PURPOSE OR COPIED OR COMMUNICATED TO ANY OTHER PERSON WITHOUT WRITTEN PERMISSION FROM DART AEROSPACE USA, INC.

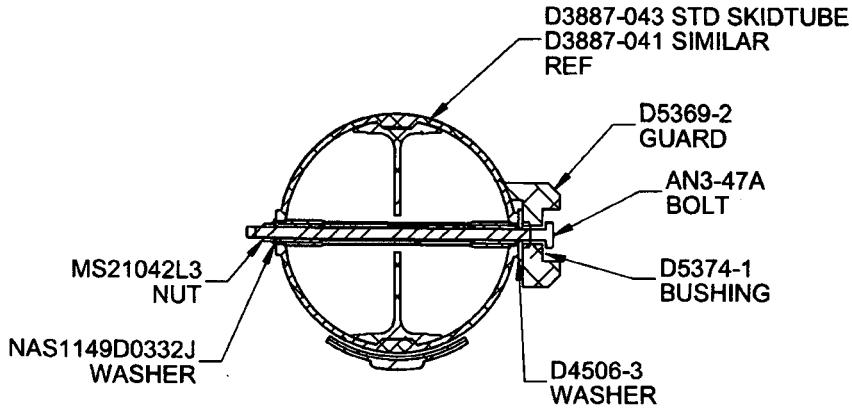

SECTION A-A

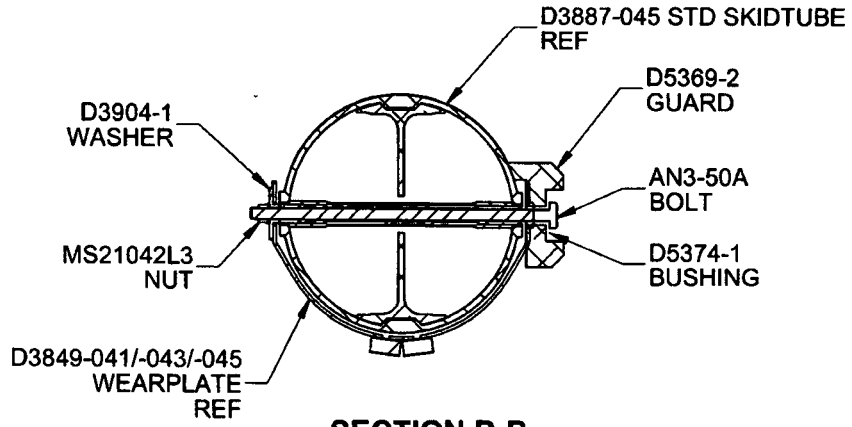

SECTION B-B

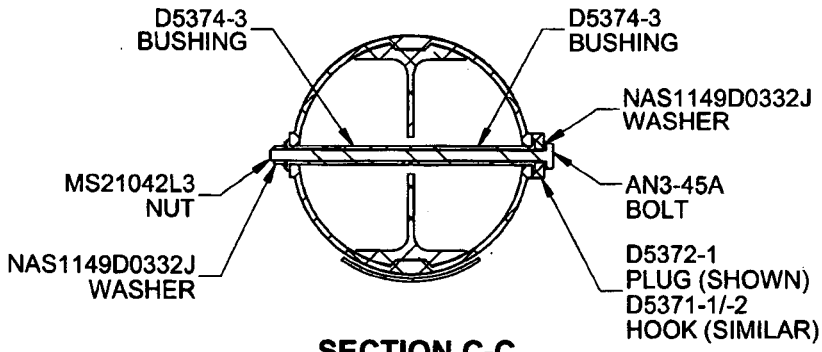

SECTION C-C
(D5369-2 NOT SHOWN FOR CLARITY)

DESIGN	RF	**DART AEROSPACE USA, INC.** EUGENE, OR
DRAWN	RF	
CHECKED	HS	DRAWING NO. DSI 9734 — REV. A
MFG. APPR.	N/A	SHEET 5 OF 8
APPROVED	HS	TITLE: SKIDTUBE PROTECTOR KIT — SCALE: NTS
DE APPR.		
DATE	15.12.10	

COPYRIGHT © 2014 BY DART AEROSPACE USA, INC.
THIS DOCUMENT IS PRIVATE AND CONFIDENTIAL AND IS SUPPLIED ON THE EXPRESS CONDITION THAT IT IS NOT TO BE USED FOR ANY PURPOSE OR COPIED OR COMMUNICATED TO ANY OTHER PERSON WITHOUT WRITTEN PERMISSION FROM DART AEROSPACE USA, INC.

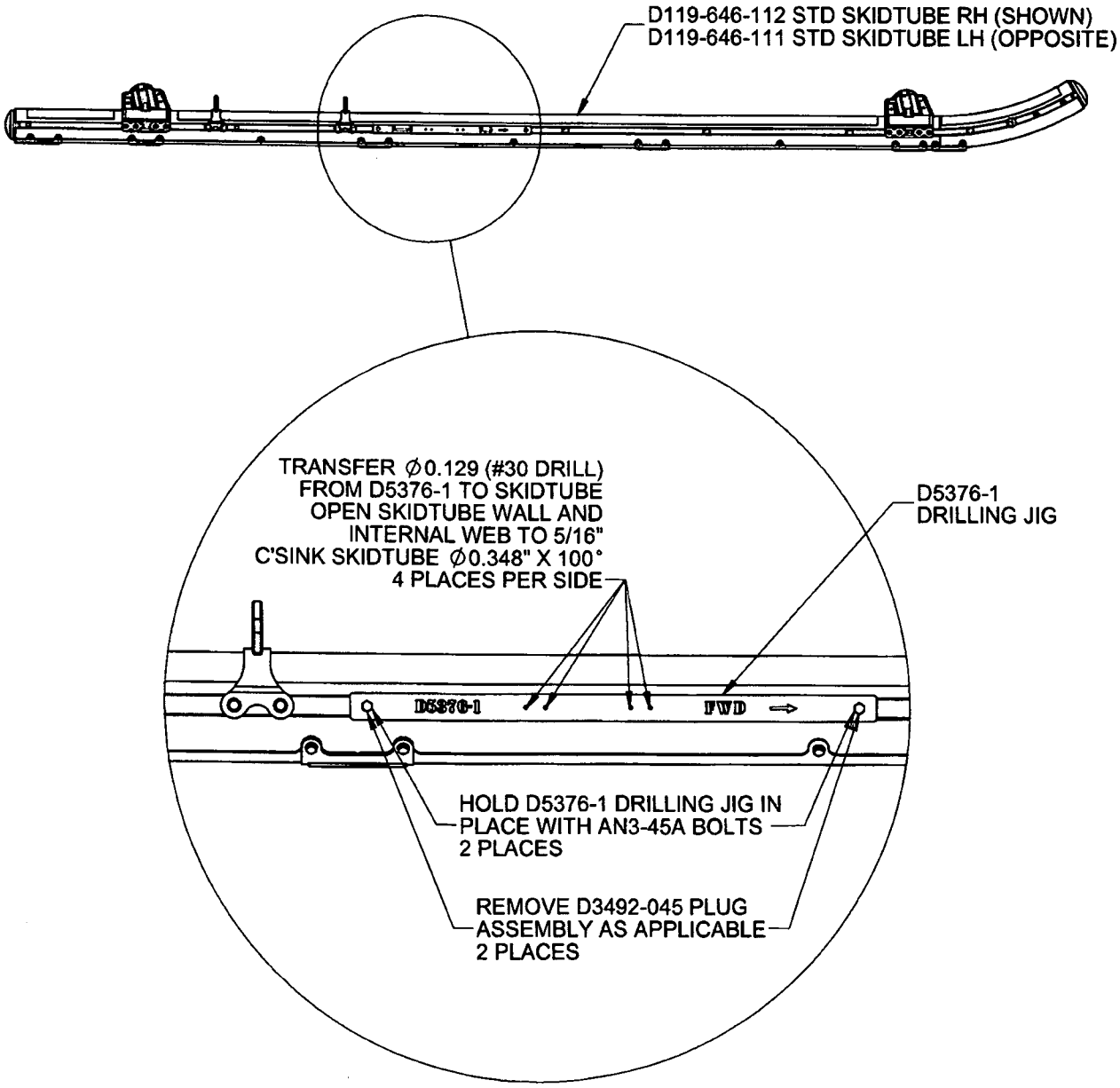

DETAIL D

FIGURE 3: USING D5376-1 DRILLING JIG

DESIGN	RF	**DART AEROSPACE USA, INC.** EUGENE, OR
DRAWN	RF	
CHECKED	HS	DRAWING NO. DSI 9734 — REV. A
MFG. APPR.	N/A	SHEET 6 OF 8
APPROVED	HS	TITLE SKIDTUBE PROTECTOR KIT — SCALE NTS
DE APPR.		
DATE	15.12.10	

COPYRIGHT © 2014 BY DART AEROSPACE USA, INC.
THIS DOCUMENT IS PRIVATE AND CONFIDENTIAL AND IS SUPPLIED ON THE EXPRESS CONDITION THAT IT IS NOT TO BE USED FOR ANY PURPOSE OR COPIED OR COMMUNICATED TO ANY OTHER PERSON WITHOUT WRITTEN PERMISSION FROM DART AEROSPACE USA, INC.

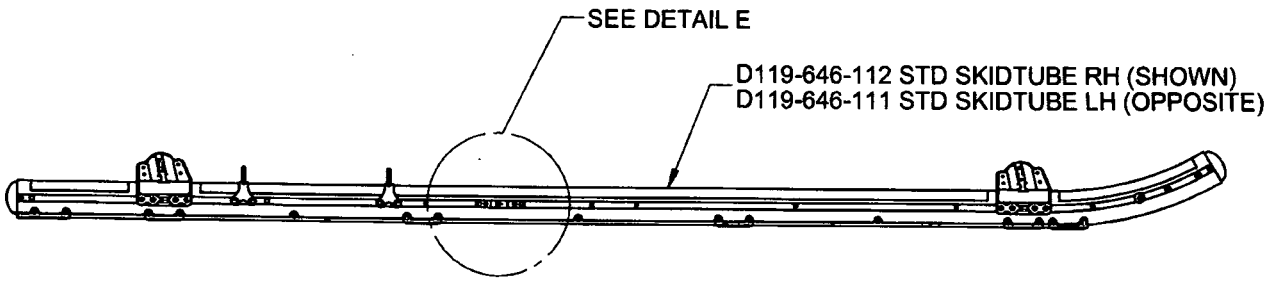

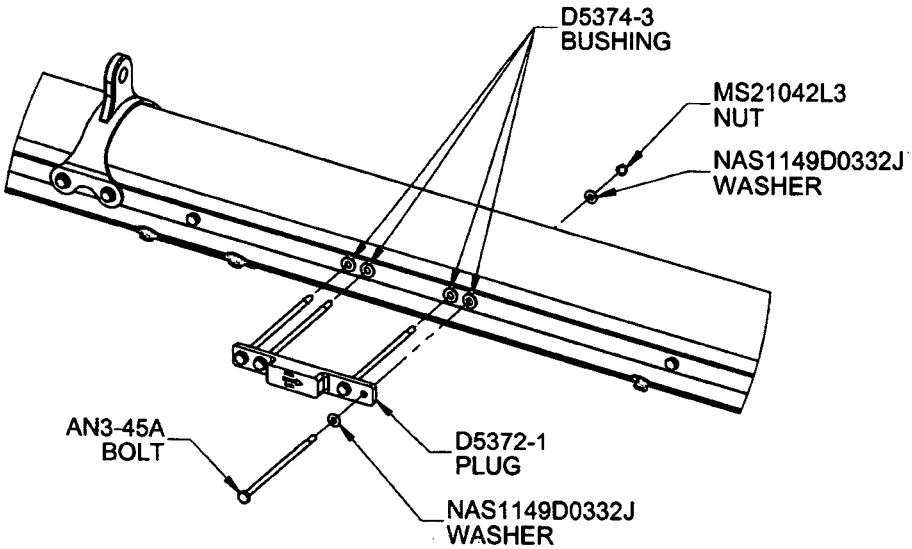

DETAIL E

FIGURE 4: D5372-1 PLUG INSTALLATION

DESIGN	RF	**DART AEROSPACE USA, INC.** EUGENE, OR
DRAWN	RF	
CHECKED	HS	DRAWING NO. DSI 9734 — REV. A
MFG. APPR.	N/A	SHEET 7 OF 8
APPROVED	HS	TITLE SKIDTUBE PROTECTOR KIT — SCALE NTS
DE APPR.		
DATE	15.12.10	

COPYRIGHT © 2014 BY DART AEROSPACE USA, INC.
THIS DOCUMENT IS PRIVATE AND CONFIDENTIAL AND IS SUPPLIED ON THE EXPRESS CONDITION THAT IT IS NOT TO BE USED FOR ANY PURPOSE OR COPIED OR COMMUNICATED TO ANY OTHER PERSON WITHOUT WRITTEN PERMISSION FROM DART AEROSPACE USA, INC.

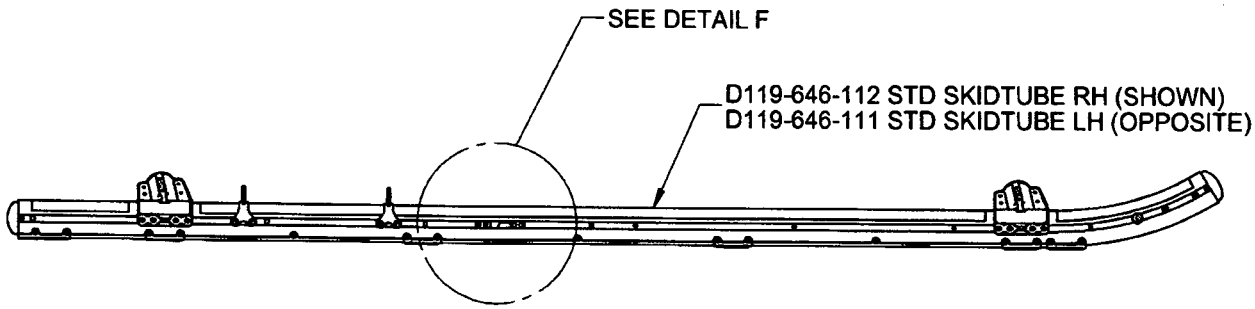

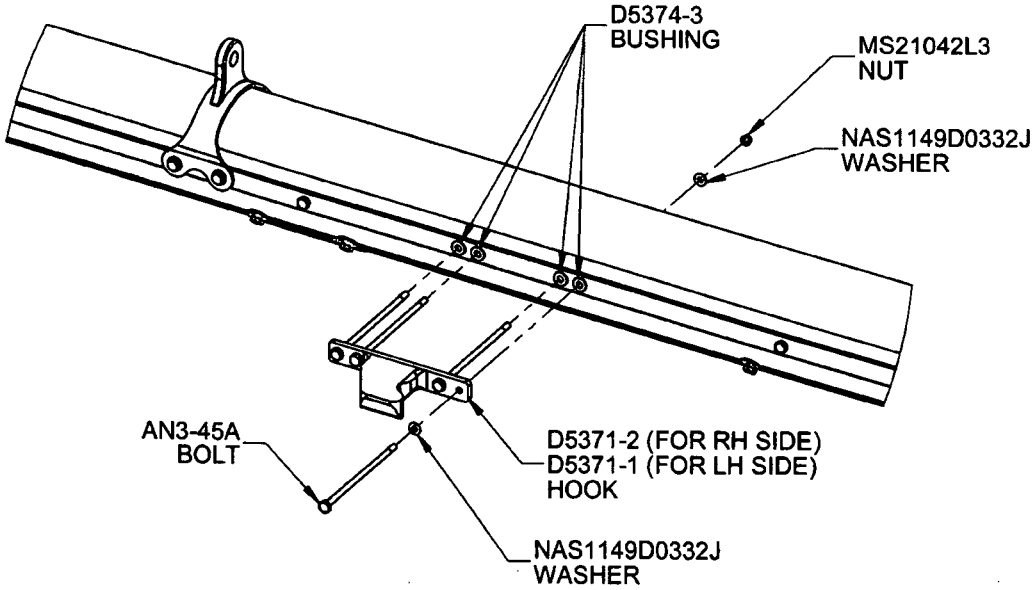

DETAIL F

FIGURE 5: D5371-1/-2 HOOK INSTALLATION

DESIGN	RF	**DART AEROSPACE USA, INC.** EUGENE, OR
DRAWN	RF	
CHECKED	HS	DRAWING NO. DSI 9734 — REV. A — SHEET 8 OF 8
MFG. APPR.	N/A	
APPROVED	HS	TITLE SKIDTUBE PROTECTOR KIT — SCALE NTS
DE APPR.		
DATE	15.12.10	

COPYRIGHT © 2014 BY DART AEROSPACE USA, INC.
THIS DOCUMENT IS PRIVATE AND CONFIDENTIAL AND IS SUPPLIED ON THE EXPRESS CONDITION THAT IT IS NOT TO BE USED FOR ANY PURPOSE OR COPIED OR COMMUNICATED TO ANY OTHER PERSON WITHOUT WRITTEN PERMISSION FROM DART AEROSPACE USA, INC.